PROJ NO	
DRAWN	B.D.J
DATE	6/1/00
CHECKED	JPT
REVISIONS	
DATE	BY

A NEW BUILDING FOR LIFESTYLE, INC.

ELAND DEVELOPMENT, INC.

LEE COUNTY FLORIDA

JASON P. TRAMONTE
A R C H I T E C T
I N C
4524 S.E. 16TH PLACE CAPE CORAL FLORIDA 33904
(941) 549-0991 AA 0002443

SHEET A-1 OF 4 SHEETS

RIB ROOF
METAL BUILDING SPECIFICATIONS

GENERAL

SCOPE

THIS SPECIFICATIONS CONCERNS THE MANUFACTURE OF AND THE CONSTRUCTION DETAILS FOR METAL BUILDINGS DESIGNED AND CONSTRUCTED TO BE WEATHER TIGHT AND EASILY ERECTED THE BUILDING SHALL INCLUDE THE STRUCTURAL FRAMING ROOF AND WALL COVERING TRIM AND CLOSURES AND ACCESSORIES HEREIN DESCRIBED

BUILDING DESCRIPTION

THE BUILDING SHALL BE THE DESIGN OF A MANUFACTURERS REGULARLY ENGAGED IN THE FABRICATION OF PRE ENGINEERED STRUCTURES CONFORMING TO THE RECOMMENDATIONS OF THE MBMA MANUAL.

THE MANUFACTURER SHALL HAVE BEEN IN THE SYSTEMS BUILDING BUSINESS FOR FIFTEEN YEARS AND SHALL BE A MEMBER OF THE METAL BUILDING MANUFACTURERS ASSOCIATION (MBMA).

THE FOLLOWING METAL BUILDING MANUFACTURERS ARE ACCEPTABLE:

- A&S BUILDING SYSTEMS INC.
- AMERICAN BUILDINGS COMPANY
- BUTLER MANUFACTURING COMPANY
- CECO BUILDING SYSTEMS
- DEAN STEEL BUILDINGS INC.
- GULF STATES MANUFACTURING INC.
- KIRBY BUILDING SYSTEMS
- METALLIC BUILDINGS
- VARCO-PRUDEN BUILDINGS, INC.
- WHIRLWIND BUILDING SYSTEMS

OTHER METAL BUILDING MANUFACTURERS MAY BE CONSIDERED PROVIDED THAT THEY MEET ALL SECTIONS OF THIS SPECIFICATION, AND THEY ARE APPROVED IN WRITING BY THE ARCHITECT

BUILDING NOMENCLATURE

THE BUILDING 'WIDTH AND LENGTH' SHALL BE MEASURED FROM INSIDE TO INSIDE FACE OF THE WALL COVERING.

THE BUILDING 'EAVE HEIGHT' SHALL BE MEASURED FROM THE BOTTOM OF THE BASE PLATE OF THE RIGID FRAME COLUMNS TO THE INTERSECTING OF LINES REPRESENTING THE INSIDE OF THE WALL COVERING AND THE INSIDE OF THE ROOF COVERING.

THE 'ROOF SLOPE' SHALL BE THE ANGEL THAT THE ROOF SURFACE MAKES WITH THE HORIZONTAL EXPRESSED IN THE UNITS OF THE VERTICAL RISE TO 12 UNITS OF HORIZONTAL RUN.

SHOP DRAWINGS AND CERTIFICATIONS

THE BUILDING MANUFACTURER SHALL FURNISH COMPLETE CONSTRUCTION DETAILS SHOWING ANCHOR BOLT SIZES AND SETTINGS SIDEWALLS END WALLS AND ROOF FRAMING, TRANSVERSE CROSS SECTIONS COVERING

AND FLASHING DETAILS TO CLEARLY INDICATE THE PROPER ASSEMBLY OF ALL BUILDING PARTS. THESE DRAWINGS SHALL BE PRODUCED UNDER DIRECT SUPERVISION OF A FLORIDA REGISTERED STRUCTURAL ENGINEER WHOM SHALL SEAL EACH SHEET OF FOUR (4) SETS WHICH SHALL BE SUPPLIED TO THE GENERAL CONTRACTOR FOR REVIEW AND APPROVAL.

DESIGN

GENERAL

ALL STRUCTURAL STEEL SECTIONS AND WELDED PLATE MEMBERS SHALL BE DESIGNED IN ACCORDANCE WITH THE LATEST EDITION OF THE AISC 'SPECIFICATIONS FOR THE DESIGN, FABRICATION, AND ERECTION OF STEEL FOR BUILDINGS

ALL COLD FRAMED STRUCTURAL STEEL MEMBERS AND EXTERIOR COVERING SHALL BE IN ACCORDANCE WITH THE LATEST EDITION AISI 'SPECIFICATION FOR THE DESIGN OF COLD FORMED STEEL STRUCTURAL MEMBERS'

DESIGN LOADS

THE FOLLOWING CRITERIA FOR LIVE LOADS AND WIND LOADS SHALL BE FOLLOWED IN THE DESIGN OF STANDARD BUILDING COMPONENTS IN ACCORDANCE WITH SBCCI STANDARD BUILDING CODE, 1997 EDITION WIND VELOCITY OF 110 MPH, AND ROOF LIVE LOAD AS PER SECTION 1606

LOAD DESIGNATION	LIVE LOAD (PSF) TO FRAME	WIND LOAD TO PURLINS	APPLICABLE (MPH)	BUILDING CODE
110	12	20	110	SEC 1606 SBC, 1997

THE BUILDING SHALL BE DESIGNED TO THE LOAD COMBINATION SPECIFIED IN THE MBMA 'LOW RISE BUILDING SYSTEM MANUAL' 1986 EDITION.

ROOF LIVE LOADS SHALL BE APPLIED TO THE HORIZONTAL ROOF PROJECTION. WIND LOADS SHALL BE ASSUMED TO ACT HORIZONTALLY AND SHALL BE APPLIED AS PRESSURE AND SUCTION IN ACCORDANCE WITH SECTION 1606 OF THE 1997 STANDARD BUILDING CODE OR THE MBMA 'LOW RISE BUILDING SYSTEMS MANUAL,' 1986 EDITION.

DESIGNS SHALL INCLUDE THE BUILDING DEAD LOAD THE ROOF LIVE LOAD WIND AND SEISMIC LOAD IN ACCORDANCE TO STANDARD BUILDING CODE INTERPRETATION OF THE BUILDING CODE SPECIFIED ADDITIONAL COLLATERAL AND AUXILIARY LOADS SHALL BE INCLUDED WHEN SPECIFIED BY THE BUYER, OR AS INDICATED BY DRAWING.

STRUCTURAL FRAMING

GENERAL

ALL FRAMING MEMBERS SHALL BE SHOP FABRICATED FOR BOLTED FIELD ASSEMBLY

PRIMARY STRUCTURAL FRAMING SHALL INCLUDE THE TRANSVERSE RIGID FRAME, WING UNIT RAFTER BEAMS AND COLUMNS BEARING AND FRAMES END WALL COLUMNS AND WIND BRACING.

SECONDARY STRUCTURAL FRAMING SHALL INCLUDE THE PURLINS GIRTS EAVE STRUTS FLANGE BRACING SILL SUPPORT CLIPS AND OTHER MISCELLANEOUS STRUCTURAL PARTS.

ALL HOT ROLLED STEEL SHEET PLATE, AND STRIP FOR BUILT UP SECTIONS SHALL HAVE A MINIMUM YIELD POINT OF 55,000 PSI HOT ROLLED STRUCTURAL SECTIONS SHALL CONFIRM TO THE REQUIREMENTS OF ASTM SPECIFICATION A-36 ALL COLD-FORMED SECTIONS 'C' AND 'Z' SHALL HAVE MINIMUM YIELD POINT OF 55,000 PSI. GALVANIZED SHEET AND STRIP FOR STRUCTURAL FRAMING MEMBERS SHALL CONFIRM TO ASTM SPECIFICATIONS A-446, GRADE 'A'

PIPE FOR COLUMNS AND OTHER STRUCTURAL USES SHALL BE 42,000 PSI YIELD

UNLESS OTHERWISE SPECIFIED THE MINIMUM THICKNESS OF FRAMING MEMBERS SHALL BE AS FOLLOWS:
COLD FORMED PRIMARY FRAMING MEMBERS____14 GAGE
COLD-FORMED SECONDARY FRAMING MEMBERS____17 GAGE
WEBS OF WELDED BUILT-UP MEMBERS____11 GAGE
FLANGES OF WELDED BUILT-UP MEMBERS____3/16"
BRACING (CABLE STANDARD)____1/4" DIA.

COLD-FORMED SECTIONS SHALL BE MANUFACTURED BY THE PRECISION ROLL OR BREAK FORMING. ALL DIMENSIONS SHALL BE TRUE.

ALL SHOP CONNECTIONS SHALL BE BY WELDING IN ACCORDANCE WITH THE LAWS 'STRUCTURAL WELDING CODE' LATEST EDITION. WELDING SHALL BE SUBMERGED ARC OR GAS SHIELDED ARC PROCESS.

ALL FIELD CONNECTIONS SHALL BE FIELD BOLTED WITH ASTM SPECIFICATIONS A-307 OR A-325 BOLTS AS SHOWN ON DRAWINGS. A-325 BOLTS HAVE BEEN TIGHTENED BY THE TURN OF THE NUT METHOD CONNECTIONS IN SECONDARY MEMBERS SHALL BE MADE WITH SPECIAL 1/2" TRUSS, HEAD FIN, NECK BOLTS AND HEX NUTS WHEN REQUIRED

ALL FRAMING MEMBERS SHALL CARRY AN EASILY VISIBLE IDENTIFYING MARK

EXPANSION JOINTS

LONGITUDE OR TRANSVERSE EXPANSION JOINTS SHALL BE PROVIDED TO ALLOW FOR THE AFFECTS OF TEMPERATURE INDUCED CONTRACTION OR EXPANSION ON ALL ROOF AND WALL ASSEMBLAGES. THE JOINT SHALL BE FLASHED AND COUNTER-FLASHED TO INSURE WEATHER TIGHTNESS.

RIGID FRAMES WING UNIT FRAMES AND CANOPY BEAMS ALL MEMBERS SHALL BE SEALED BUILT-UP, 'I' SHAPES EITHER CONSTANT DEPTH OR TAPERED

BEARING END FRAMES

BEARING END FRAMES SHALL BE MILL ROLLED SECTIONS AND CONSIST OF COLUMNS AT THE BUILDING CORNERS AND A CONTINUOUS RAFTER BEAM SUPPORTED BY THE ENDWALL COLUMNS AN OPTIONAL BEARING FRAME SYSTEM WILL CONSIST OF COLD FORMED 'C' OR 'Z' SECTIONS AS REQUIRED BY DESIGN.

ENDWALL COLUMNS

ENDWALL COLUMNS SHALL BE MILL ROLLED SECTIONS OR WELDED BUILT-UP 'I' SHAPES. OPTIONAL ENDWALL COLUMNS WILL CONSIST OF SOLD-FORMED 'C' SECTIONS

PURLINS AND GIRTS

PURLINS AND GIRTS SHALL BE COLD-FORMED 'Z' SECTIONS WITH STIFFENED FLANGES. THEY SHALL BE SIMPLE OR CONTINUOUS SPAN AS REQUIRED BY DESIGN.

EAVE STRUTS

EAVE STRUTS SHALL BE COLD FORMED C-SECTION SUFFICIENT TO PROVIDE ADEQUATE BACKUP FOR BOTH ROOF AND WALL PANELS AT THE BUILDING EAVES

WIND BRACING

INSET GIRT BUILDINGS - WIND BRACING IN THE ROOF AND/OR SIDE WALL IS NOT REQUIRED WHERE THE DIAPHRAGM STRENGTH OF THE ROOF AND/OR WALL COVERING IS ADEQUATE TO RESIST THE LONGITUDINAL WING FORCES. WHEN REQUIRED WIND BRACING SHALL BE PROVIDED BY FIXED BASE CORNER COLUMNS OR OTHER SUITABLY DESIGNED BRACING.

BYPASS GIRT BUILDINGS - WIND BRACING SHALL CONSIST OF DIAGONAL BRACING AND SHALL BE PROVIDED IN BOTH ROOF AND SIDE WALL AS INDICATED ON THE METAL BUILDING MANUFACTURER'S DRAWINGS DESIGN SHALL INCLUDE REINFORCEMENT OR PURLIN AND EAVE STRUTS AS REQUIRED

SPECIAL BRACING

WHEN DIAGONAL BRACING IS NOT PERMITTED IN THE SIDE WALL A RIGID FRAME TYPE PORTAL OR FIXED BASE COLUMNS MUST BE USE. WIND BRACING IN THE ROOF AND/OR WALLS NEED NOT TO BE FURNISHED WHERE IT CAN BE SHOWN THAT THE DIAPHRAGM STRENGTH OF THE ROOF AND/ OR WALL COVERING IS ADEQUATE TO RESIST THE APPLIED WIND LOADS.

FLANGE BRACING

THE INSIDE FLANGES OF ALL RIGID FRAMES SHALL BE BRACED LATERALLY BY ANGLES CONNECTED TO THE FLANGE AND WEB TO THE FRAME AND TO THE WEB OF THE PURLIN OR GIRT SO THAT THE ALLOWABLE COMPRESSIVE STRESS IS ADEQUATE FOR ANY COMBINATION OF LOADING.

BASE SUPPORT

A CONTINUOUS MEMBER SHALL BE PROVIDED TO WHICH THE BASE OF THE WALL COVERING MAY BE ATTACHED THIS MEMBER SHALL BE A 14 GAGE GALVANIZED PAINTED BROWN BASE TRIM SECURED TO THE CONCRETE FLOOR WITH PROVEN DRIVEN FASTENERS OR EQUIVALENT ANCHORS

FRAMED OPENINGS

STRUCTURAL FRAMING MEMBERS OF ALL OPENINGS SHALL BE ADEQUATE FOR THE SPECIFIED DESIGN WIND LOADS

LONGITUDE OR TRANSVERSE EXPANSION JOINTS SHALL BE PROVIDED TO ALLOW FOR THE AFFECTS OF TEMPERATURE INDUCED CONTRACTION OR

EXPANSION ALL ROOF AND WALL ASSEMBLAGES THE JOINT SHALL BE FLASHED AND COUNTER FLASHED TO INSURE WEATHER TIGHTNESS

PAINTING

ALL STRUCTURAL FRAMING MEMBERS WHICH ARE NOT GALVANIZED SHALL BE CLEANED TO REMOVE ALL DIRT GREASE, OIL AND LOOSE MILL SCALE AND GIVEN ONE SHOP COAT OF IRON OXIDE PRIMER FORMULATED TO MEET OR EXCEED THE PERFORMANCE REQUIREMENTS OF FEDERAL SPECIFICATIONS TT-P 636

ROOF AND WALLS

STANDARD PANELS

STANDARD ROOF WALL LINER AND PARTITION PANELS SHALL BE 26 GAGE UNPAINTED GALVALUME (TM) OR 26 GAGE COLOR COATED GALVANIZED COLD FORMED PANELS

MATERIAL FOR 26 GAGE PANELS SHALL BE GALVALUME (TM) STEEL (80,000 PSI YIELD) OR COLOR COATED GALVANIZED STEEL (80,000 PSI YIELD) CONFORMING TO ASTM SPECIFICATION A 446-GRADE E.

STANDARD PANEL PROFILES

WALL AND ROOF PANELS: 1 1/4" DEEP RIBS 12" ON CENTER WITH TWO 1/4" DEEP INTERMEDIATE STIFFENERS 36" NET COVERAGE.

SOFFIT PANELS: 1 1/4 DEEP RIBS 12" ON CENTER WITH TWO 1/4 DEEP INTERMEDIATE STIFFENERS 36" NET COVERAGE.

FASTENERS

ALL SELF-TAPPING FASTENERS SHALL CONFORM TO USASB18.6.4 AND SHALL HAVE TYPE A OR TYPE AB THREADS. ALL SELF DRILLING FASTENERS SHALL CONFIRM TO FIII, WHERE REQUIRED FOR WEATHER TIGHTNESS FASTENERS SHALL BE ASSEMBLED WITH 5/8 OD METAL AND NEOPRENE SEALING WASHERS

PLATING

A. ALL FASTENERS SHALL BE PLATED TO MINIMUM THICKNESS OF .0005 ALL WASHERS SHALL BE PLATED TO MINIMUM EQUAL TO G-90 GALVANIZED STEEL
B. EXTENDED CORROSION RESISTANT FASTENERS SHALL BE ZAC (TM) (ZINC-ALUMINUM CAST HEAD) WITH ALUMINUM AND NEOPRENE SEALING WASHERS.

COLOR COATING

AFTER PLATING ALL FASTENERS AND SEALING WASHERS SHALL RECEIVE A SHOP APPLICATION OS A BAKED-ON VINYL CO POLYMER FINISH COATING. THE COLOR OF THE FINISH SHALL MATCH THE WALL, TRIM, AND/OR ROOF PANELS

SEALER

SEALER FOR SIDELAPS ENDLAPS AND FLASHING SHALL BE POLYMER SEALANT IN EXTRUDED TAPE FORM. THE SEALER SHALL BE NON-SHRINKING, NON DRYING, AND NON-TOXIC AND SHALL HAVE SUPERIOR ADHESION TO METALS PLASTICS AND PAINTED SURFACES SERVICE RANGE TEMPERATURES FROM -30 DEGREES TO +300 DEGREES.TYPE II CLASS B AND TT-C-1796A. INSTALLATION OF ROOF AND WALL PANELS

ROOF PANELS SHALL BE CONTINUOUS FROM RIDGE TO EAVE FOR BUILDINGS 60 WIDE OR LESS. WHERE ENDLAPS ARE REQUIRED THEY SHALL BE A MINIMUM OF 6" LONG AND SHALL OCCUR AT A ROOF PURLIN.

SIDE WALL AND ENDWALL PANELS SHALL BE CONTINUOUS FROM SILL TO ROOF LINE EXCEPT WHERE LENGTH BECOMES PROHIBITIVE FOR HANDLING PURPOSES ENDWALL PANELS FOR BUILDING WITH 4:12 ROOF SLOPE SHALL HAVE A SPLICE AT THE EAVE LINES.

ENDWALL PANELS SHALL BE SQUARE CUT FOR BUILDINGS 1:12 ROOF SLOPE AND BEVEL CUT FOR BUILDINGS WITH A 4:12 ROOF SLOPE.

BEFORE SECURING, ALL LAPS OF ROOF PANELS SHALL BE SEALED WITH A CONTINUOUS RIBBON OF TAPE SEALER.

STANDARD ROOF PANELS

A. ROOF PANELS SHALL BE SECURED TO PURLINS WITH #14 SHEET METAL SCREWS AT A MINIMUM SPACING OF 12"
B. AT THE ENDLAPS OF RIB SHEETS THE MAXIMUM SPACING SHALL BE ON EACH SIDE OF THE MAJOR RIB FOR RIB 12 PANELS.
C. SIDELAPS TO THE ROOF PANELS SHALL BE STITCHED THROUGH THE HIGH FLAT OF THE RIB WITH #14 SHEET METAL SCREWS AT A MAXIMUM SPACING OF 12"

STANDARD WALL PANELS

A. WALL PANELS SHALL BE SECURED TO GIRTS WITH #14 SHEET METAL SCREWS AT A MAXIMUM SPACING OF 12"
B. AT THE ENDLAPS OF RIB SHEETS THE MAXIMUM SPACING SHALL BE ON EACH SIDE OF THE MAJOR RIB FOR PANELS.
C. AT THE SIDELAPS OF SHEETS #10 SHEET METAL SCREWS SHALL BE PLACED AT A MAXIMUM OF 18" ON CENTER.

FLASHING, CLOSURES AND TRIM

FLASHING AND/OR TRIM SHALL BE FURNISHED AT THE RAKE, CORNERS AND EAVES, AT FRAMED OPENINGS AND WHENEVER NECESSARY TO PROVIDE WEATHER TIGHTNESS AND A FINISHED APPEARANCE.

SCULPTURED RAKE TRIM SHALL BE ROLL FORMED 24 GAGE MATERIAL 20' LONG TO MINIMIZE JOINTS OTHER TRIM SHALL BE 26 GAGE.

FLASHING AND TRIM MATERIAL SHALL BE GALVALUME (TM) STEEL (50,000 PSI YIELD) OR COLOR COATED GALVANIZED STEEL CONFORMING TO ASTM SPECIFICATION A-446 GRADE D (50,000 PSI YIELD).

A FORMED PANEL MATCHING THE SLOPE AND PROFILE OR ADJOINING PANELS SHALL BE PROVIDED ALONG THE BUILDING RIDGE FOR PANELS. A RIDGE FLASHING AND CLOSURE SHALL BE USED WITH MASTER BEAM AND SUPREME BEAM PANELS. A PRE-FORMED METAL OUTSIDE CLOSURE AND RIDGE FLASHING SHALL BE USED WITH PRO BEAM PANELS.

CLOSURE STRIPS MATCHING THE PROFILE OF THE PANEL SHALL BE INSTALLED ALONG THE RAKE AND/OR EAVE WHERE REQUIRED FOR WEATHER TIGHTNESS. CLOSURE STRIPS SHALL BE CLOSED CELL, SEMI RIGID CROSS LINKED POLYETHYLENE FOAM LAMINATED FOR STRENGTH AND UNIFORM COMPRESSIBILITY METAL OUTSIDE CLOSURE STRIPS SHALL BE USED AT THE EAVE FOR PRO BEAM PANELS

COLOR FINISH

EXTERIOR STEEL SURFACES SHALL BE GALVALUME (TM) OR COLOR COATED GALVANIZED STEEL.

A. COLOR OF ROOF PANELS WALL PANELS, AND CORNER TRIM SHALL BE SELECTED FROM THE STANDARD MANUFACTURERS COLORS.
B. THE ROOF VENTILATORS DOWN POUTS EAVE TRIM AND DOOR FLASHING SHALL BE SELECTED FROM THE STANDARD MANUFACTURERS COLORS.

THE STANDARD WALL AND SOFFIT PANEL COLOR SURFACE SHALL BE A SILICONE POLYESTER CO POLYMER RESIN TYPE TO GIVE SUPERIOR ADHESION AND DURABILITY. THE FINISH COAT SHALL BE 1.0 MIL THICK. THE REVERSE COAT SHALL BE OFF WHITE POLYESTER NOMINAL .05 THICKNESS.

ERECTION

ERECTION SHALL BE IN ACCORDANCE WITH LOW RISE METAL BUILDINGS SYSTEMS MANUAL, 1986 EDITION.

GENERAL NOTES

INDUSTRY STANDARDS:
INDUSTRY STANDARDS SHALL HAVE THE SAME FORCE AND EFFECT ON PERFORMANCE OF WORK AS IF COPIED DIRECTLY INTO THE CONTRACT DOCUMENTS OR BOUND AND PUBLISHED THERE WITH. COMPLY WITH STANDARDS IN EFFECT AS OF DATE OF CONTRACT DOCUMENTS UNLESS OTHERWISE NOTED OR REQUIRED BY GOVERNING AUTHORITIES

CODES:
ALL WORK SHALL CONFORM TO THE FOLLOWING CODES AND ORDINANCES
NFPA LIFE SAFETY CODE 1991 EDITION
STANDARD FIRE PREVENTION CODE 1997 EDITION
STANDARD BUILDING CODE 1997 EDITION
STANDARD MECHANICAL CODE 1997 EDITION
STANDARD PLUMBING CODE 1997 EDITION
NATIONAL ELECTRIC CODE 1997 EDITION

LOCAL CODES AND ORDINANCES WERE APPLICABLE, FLOOD DAMAGE PREVENTION ORDINANCES.

SUPERVISION AND CONTROL:
THE ARCHITECT HAS NOT BEEN RETAINED NOR IS RESPONSIBLE FOR THE FIELD SUPERVISION OR CONSTRUCTION ADMINISTRATION OF THIS PROJECT. THE GENERAL CONTRACTOR IS RESPONSIBLE FOR THE FIELD SUPERVISION, CONSTRUCTION ADMINISTRATION, REVIEW AND APPROVAL OF ALL SHOP DRAWINGS VERIFICATION ON SITE OF ALL DIMENSIONS AND STRICT COMPLIANCE WITH THESE CONSTRUCTION DOCUMENTS. THE GENERAL CONTRACTOR SHALL NOTIFY THE ARCHITECT IN WRITING WITHIN 10 DAYS OF RECEIPT OF CONSTRUCTION DOCUMENTS OF ANY ERROR OR OMISSION OF THE ARCHITECT

THE GENERAL CONTRACTOR AGREES TO ASSUME LIABILITY FOR CORRECTIVE MEASURES SHOULD THE ARCHITECT NOT BE INFORMED AS NOTED. THE GENERAL CONTRACTOR SHALL NOT DEVIATE FROM CONSTRUCT ON DOCUMENTS OR MAKE SUBSTITUTES WITHOUT WRITTEN APPROVAL FROM THE ARCHITECT. THE GENERAL CONTRACTOR SHALL ASSIGN A QUALIFIED CONSTRUCTION SUPERVISOR TO THE PROJECT. THE GENERAL CONTRACTOR AND HIS SUPERVISION SHALL BE RESPONSIBLE FOR THE COORDINATION OF SURVEYING/RECORDING, INSPECTIONS AND TESTING, GENERAL INSTALLATION PROVISIONS, CUTTING AND PATCHING AND CLEANING/PROTECTING.

GENERAL INSTALLATION PROVISIONS:
WELL IN ADVANCE OF EVERY MAJOR UNIT OF WORK WHICH REQUIRES COORDINATING AND INTERFACING WITH OTHER WORK, MEET AT PROJECT SITE WITH INSTALLER AND/OR REPRESENTATIVES OF MANUFACTURERS AND FABRICATORS WHO ARE INVOLVED IN OR EFFECTED BY THE UNIT OF WORK WHICH HAS PROCEEDED OR WILL FOLLOW, RECORD DISCUSSIONS. COMPLY WITH MANUFACTURER'S APPLICABLE INSTRUCTIONS AND RECOMMENDATIONS FOR INSTALLATION. INSPECT EACH ITEM OF MATERIAL OR EQUIPMENT IMMEDIATELY PRIOR TO INSTALLATION, AND REJECT DAMAGED OR DEFECTIVE ITEMS. PROVIDE ATTACHMENT AND CONNECTION DEVICES AND METHODS FOR SECURING WORK PROPERLY AS IT IS INSTALLED TRUE TO LINE AND LEVEL AND WITHIN RECOGNIZED INDUSTRY TOLERANCE. ALLOW FOR EXPANSIONS AND BUILDING MOVEMENTS. PROVIDE UNIFORM JOINT WIDTHS IN EXPOSED WORK, ORGANIZE FOR BEST VISUAL EFFECT

RECHECK MEASUREMENTS AND DIMENSIONS OF THE WORK, AS IN INTEGRAL STEP OF STARTING EACH INSTALLATION AND MAKING EACH PURCHASE OF EQUIPMENT

INSTALL WORK DURING CONDITIONS OF TEMPERATURE, HUMIDITY EXPOSURE, FORECASTED WEATHER, AND STATUS OF PROJECT COMPLETION WHICH WILL ENSURE BEST POSSIBLE RESULTS FOR EACH UNIT OF WORK IN COORDINATION WITH THE ENTIRE WORK.

ISOLATE EACH UNIT OF WORK FROM NON-COMPATIBLE WORK, AS REQUIRED TO PREVENT DETERIORATION.

COORDINATE ENCLOSURE (CLOSING IN) OF WORK WITH REQUIRED INSPECTIONS AND TESTS SO AS TO MINIMIZE THE NECESSITY OF UNCOVERING WORK FOR THAT PURPOSE

WHERE MOUNTING HEIGHTS AND LOCATIONS ARE NOT INDICATED MOUNT INDIVIDUAL UNITS OF WORK AT INDUSTRY RECOGNIZED STANDARDS. MOUNTING HEIGHTS (LOCATIONS) FOR APPLICATIONS INDICATED REFER QUESTIONABLE CHOICES TO ARCHITECT/ENGINEER.

TEMPORARY FACILITIES:
REFER TO THE 'GENERAL CONDITIONS OF THE CONTRACT OF CONSTRUCTION' FOR BASIC COMMITMENTS TO PROVIDE THE FOLLOWING SERVICES AS REQUIRED TO PERFORM THE WORK.

TEMPORARY UTILITY SERVICES:
TEMPORARY CONSTRUCTION FACILITIES:
WATER DISTRIBUTION, DEWATERING, ENCLOSURE, POWER DISTRIBUTION, TEMPORARY LIGHTING, TEMPORARY ROADS, TEMPORARY ELEVATOR/HOISTING AND MISC. CONSTRUCTION FACILITIES

TEMPORARY SUPPORT FACILITIES:
CONTRACTOR'S FIELD OFFICE, DRINKING WATER, TOILETS ECT. GENERAL CONTRACTOR SHALL PROVIDE PROJECT IDENTIFICATION SIGN (TO INCLUDE NAME OF PROJECT OWNER, CONTRACTOR, ARCHITECT AND ADDITIONAL INFORMATION AS REQUESTED BY THE OWNER. CONTRACTOR SHALL SUBMIT LAYOUT FOR ARCHITECTS APPROVAL PRIOR TO FABRICATION.

GENERAL:
FIRE PROTECTION, BARRICADES, FENCING, LOCKUP AND SECURITY, SIDEWALK PROTECTION, WATCHMAN SERVICE (WHEN REQUIRED BY OWNER OR CONTRACTOR), ENVIRONMENTAL PROTECTION, REFER ALL PRODUCT SELECTIONS AND SUBSTITUTIONS TO THE OWNER FOR FINAL APPROVAL PRIOR TO ACTUAL PURCHASE OF MATERIALS.

WARRANTY AND GUARANTY:
ONE YEAR WRITTEN GUARANTY IS REQUIRED ON ALL WORK UNDER THIS CONTRACT. SPECIFIC PRODUCT WARRANTIES WHERE THEY APPLY SHALL ALL ACCRUE TO THE OWNER. PROVIDE WRITTEN STATEMENTS AND/OR COPIES OF ALL WARRANTIES/GUARANTY TO THE OWNER.

FINAL CLEANING
AT PROJECT CLOSEOUT TIME CLEAN OR RECLEAN ENTIRE WORK TO NORMAL LEVEL FOR 'FIRST CLASS' MAINTENANCE/CLEANING OR BUILDING PROJECTS OF SIMILAR NATURE. REMOVE NON PERMANENT PROTECTIONS AND LABELS. POLISH GLASS. CLEAN EXPOSED SURFACES. TOUCH UP MINOR DAMAGE. REPLACE FILTERS. REMOVE DEBRIS. REPLACE BURNED OUT LIGHTS. SWEEP AND WASH PAVED AREAS. POLICE YARDS AND GROUNDS AND SANITIZE PLUMBING.

KEYNOTES

1. INSTALL PR. 3070 TEMPERED TINTED GLASS DOOR AND FRAME WITH TEMPERED SIDE LIGHTS & TRANSOM WITH AUTO CLOSER, ALUMINUM THRESHOLD & WEATHERSTRIPPING. STANDARD HARDWARE. CERTIFIED FOR 110 MPH WIND LOAD. REFER TO INSTALLATION DETAIL BY SUPPLIER.
2. INSTALL 3068 HOLLOW CORE WOOD DOOR IN WOOD FRAME WITH STANDARD HARDWARE. PROVIDE LEVER HANDLE HARDWARE. PROVIDE SPRING HINGES ON H.C. DOORS.
3. INSTALL 3070 PAINTED GALV. H.M. DOOR AND FRAME WITH STANDARD HARDWARE, AUTOMATIC CLOSER AND ALUMINUM THRESHOLD. CERTIFIED FOR 110 MPH WIND LOAD - REFER TO INSTALLATION DETAIL BY SUPPLIER.
4. INSTALL 12 x 12 OVERHEAD STEEL COILING DOOR WITH ASSOCIATED HARDWARE AND METAL TRACK. CERTIFIED FOR 110 MPH WIND LOAD - REFER TO INSTALLATION DETAIL BY SUPPLIER.
4A. INSTALL 6 x 10' OVERHEAD STEEL COILING DOOR WITH ASSOCIATED HARDWARE AND METAL TRACK. CERTIFIED FOR 110 MPH WIND LOAD - REFER TO INSTALLATION DETAIL BY SUPPLIER.
5. INSTALL 12 0 x 7 0 ARCH TOP TEMPERED TINTED FIXED GLASS IN ALUMINUM STOREFRONT FRAME ESP BRONZE. CERTIFIED FOR 110 MPH WIND LOAD. SET ON ALUM. SUBSILL W/UP TURNED EDGES
5A. INSTALL 4 0 x 5 -0" TEMPERED TINTED FIXED GLASS IN ALUMINUM STOREFRONT FRAME ESP BRONZE. CERTIFIED FOR 110 MPH WIND LOAD. SET ON ALUM. SUBSILL W/UP TURNED EDGES
6. INSTALL 1½ DIAMETER HANDICAP ACCESSIBLE GRAB BAR. 36 BEHIND TOILET AND 48 TO SIDE. MOUNTED @ 33" AFF
7. INSTALL WALL HUNG HANDICAP ACCESSIBLE LAVATORY WITH PAPER TOWEL DISPENSER, SOAP DISPENSER AND 18" x 24" MIRROR.
8. INSTALL HANDICAP ACCESSIBLE TOILET (1.5 GALLON WATER SAVER) WITH TOILET PAPER DISPENSER.
9. TENANT SUPPLIED BOTTLED WATER DISPENSER.
10. NOT USED
11. INDICATES LINE OF OVERHANG - REFER TO SECTIONS
12. 4' FRAME OUT AT METAL BUILDING STRUCTURE AS REQUIRED
13. INTERIOR STUD WALL CONSTRUCTION
½" PAINTED DRYWALL EACH SIDE OF 2x4 METAL STUDS @ 16" O.C. WITH CONTINUOUS TOP AND BOTTOM CHANNELS (SHOT INTO SLAB @ 32" O.C. MAX.) - WOOD BASE TYPICAL. R 11 BATT INSULATION ON OUTSIDE WALLS
14. DROP CEILING CONSTRUCTION
OWNER SELECT 2x4 LAY IN CEILING TILE IN OWNER SELECT COLOR METAL GRID SYSTEM. R 19 BATT INSULATION THROUGHOUT
15. PROVIDE (2) 1/2 RUBBER BUMPERS W/STEEL ANGLE BRACKETS & (4) 5/8 E/P ANCHORS @ EACH.
16. EXTEND GYP BOARD ONE SIDE TO ROOF STRUCTURE
17. RIGID STEEL FRAME LINE. REFER TO METAL BUILDING SHOP DRAWINGS
18. METAL DOWN SPOUT AND CONCRETE SPLASH BLOCK LOCATION.
19. PROVIDE CROSS BRACING AS REQUIRED
20. PROVIDE FIRE EXTINGUISHERS AS REQUIRED AND DIRECTED BY OWNER.
21. STEEL ENDWALL COLUMNS. REFER TO METAL BUILDING SHOP DRAWINGS
22. SUMP PUMP LOCATION. REFER TO SHEET A-3 FOR DETAILS
23. 3 6" HIGH STEEL RAILING. REFER TO SHEET A 3 FOR DETAILS

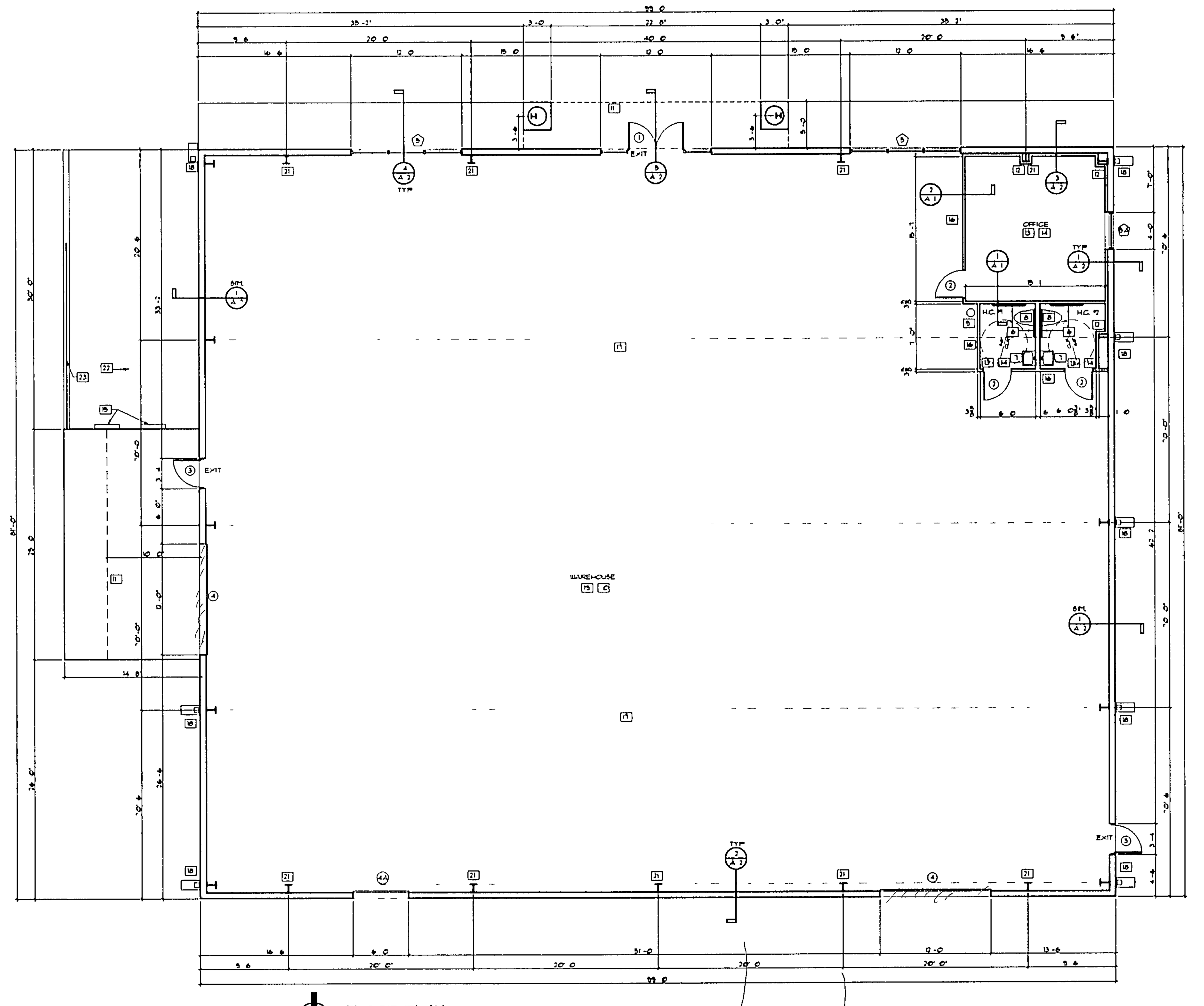

FLOOR PLAN
SCALE: 1/8 = 1-0

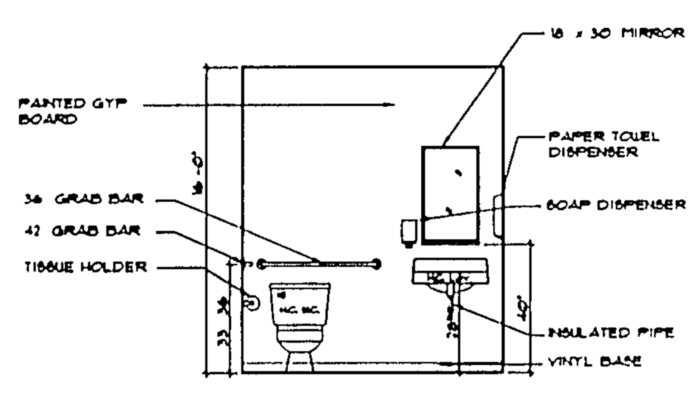

1 - H.C. REST ROOM
SCALE: 1/4 = 1 0"

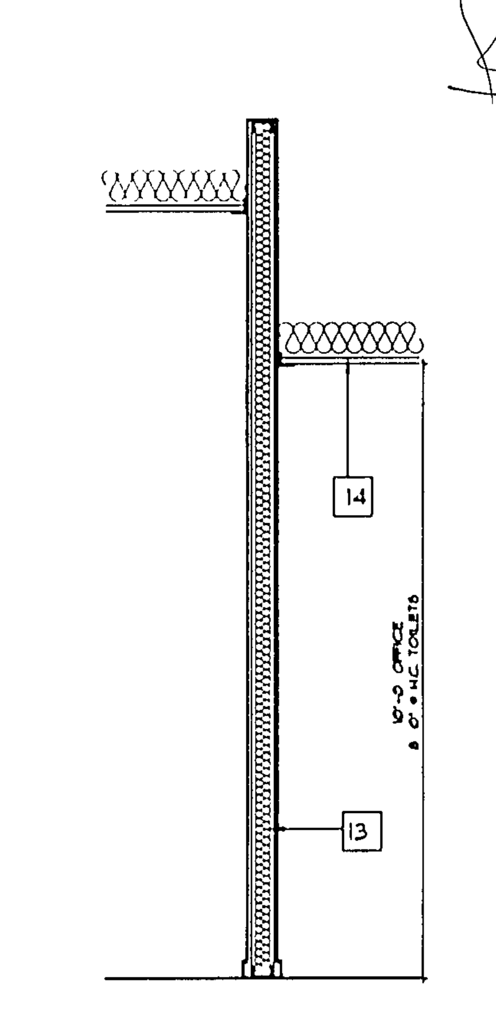

1/A-1 OFFICE PARTITION
SCALE: 1/2 = 1 0

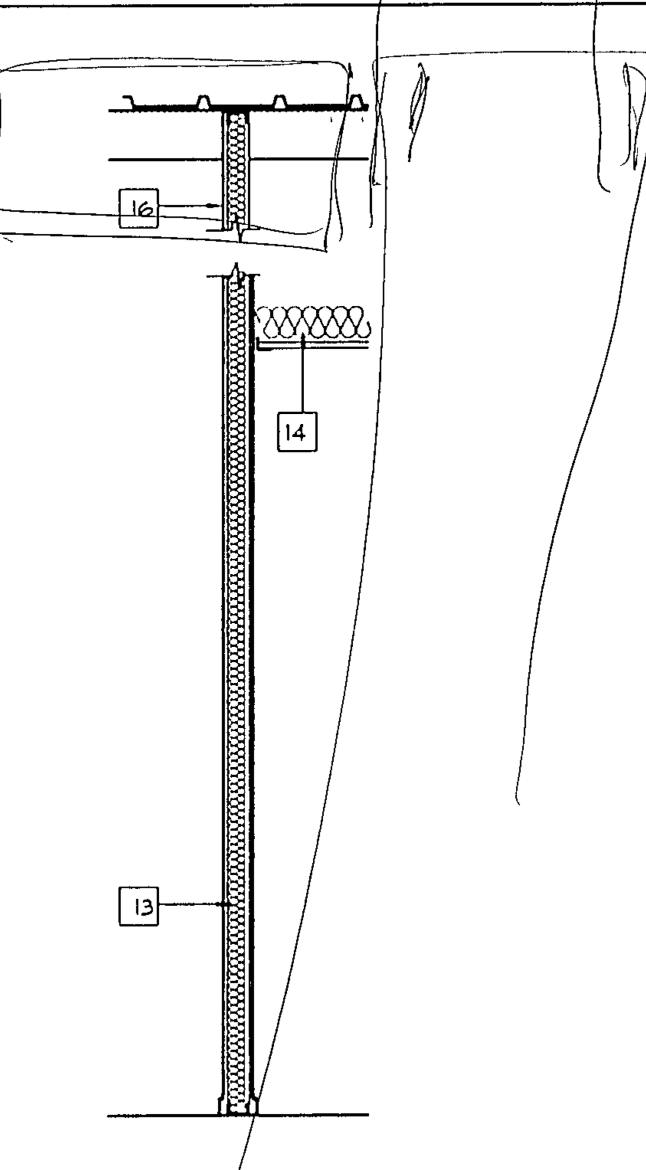

2/A-1 OFFICE PARTITION
SCALE: 1/2 = 1 0"

NOTES TO PLANS EXAMINER

THIS PROJECT IS A 8,078 SQUARE FOOT TYPE IV UNPROTECTED UNSPRINKLED SINGLE STORY MODERATE HAZARD STORAGE OCCUPANCY. ONE STORY SINGLE UNIT THIS COMPLIES WITH TABLE 500 1997 SBC.

DISTANCE TO PROPERTY LINE: EAST WALL 25 0 FROM PROPERTY LINE. WEST WALL 26 0 FROM PROPERTY LINE. NC(40%) 963 SF ALLOWED. EAST WALL NC(3%) 41 SF PROPOSED. WEST WALL NC(12%) 165 SF PROPOSED. ALL OTHER WALLS ARE GREATER THAN 30'-0" FROM PROPERTY LINE NC(NL)

WALL CONSTRUCTION IS NON-COMBUSTIBLE (METAL WALL PANELS & CMU WALLS). THIS PROJECT COMPLIES WITH TABLE 600 1997 SBC

ACCESSORY OFFICE: 357 SQUARE FEET. LESS THAN 25% OF UNIT NO FIRE SEPARATION REQUIRED. TOTAL UNIT AREA 357 SF (4.5%)

THERE WILL BE NO HIGH PILED COMBUSTIBLE STOCK.

THIS PROJECT IS FULLY ACCESSIBLE TO PHYSICALLY HANDICAPPED

THIS PROJECT HAS BEEN DESIGNED IN ACCORDANCE WITH THE 1997 SBC, SMC, SPC, FPC, LSC, FAC AND NEC

THIS PROJECT HAS BEEN DESIGNED FOR A WINDSPEED OF 110 MPH PER SECTION 1606 1997 SBC.

PROVIDE FIRE EXTINGUISHERS PER NFPA 10

METAL BUILDING AS SHOWN ON ELEVATIONS
8' MASONRY WALL HEIGHT AS SHOWN ON ELEVATIONS
3-5/8" OR 6" METAL STUDS @ 16" O.C. W/ 1/2" GYP BOARD ON EACH SIDE & WOOD BASE

SHEET INDEX

A-1 FLOOR PLAN & NOTES
A-2 EXT ELEVATIONS & WALL SECTIONS
A-3 FOUNDATION, PLAN & DETAILS
A-4 FOUNDATION NOTES
PM-1 PLUMBING, HVAC PLANS & NOTES
E-1 ELECTRICAL PLAN & NOTES

THIS PROJECT HAS BEEN DESIGNED IN ACCORDANCE WITH THE LEE COUNTY LAND DEVELOPMENT CODE CHAPTER 6 ARTICLE IV SECTION 6-444

THIS PROJECT HAS BEEN DESIGNED IN ACCORDANCE WITH THE 1997 STANDARD BUILDING CODE SECTION 1606 FOR 110 MPH WIND SPEED AND THE 1994 LIFE SAFETY CODE

JASON P. TRAMONTE LIC. NO. AR0011455